PortaSound

PSS-280

SERVICE MANUAL

PSS-280

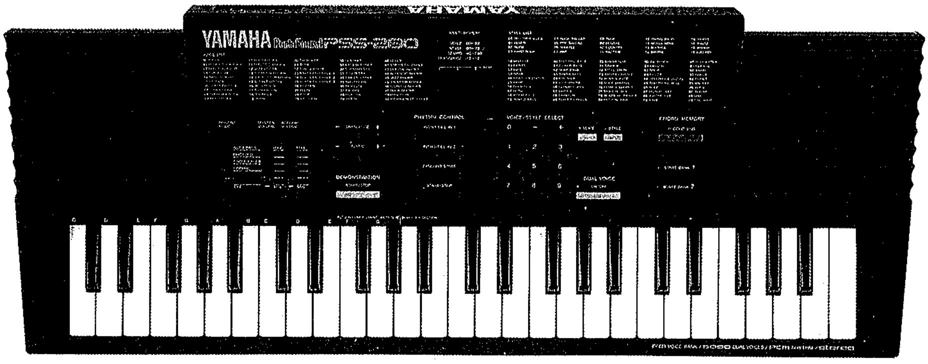

■ **CONTENTS** (目次)

SPECIFICATIONS (総合仕様) 2
PANEL LAYOUT (パネルレイアウト) 4
CIRCUIT BOARD LAYOUT (ユニットレイアウト) 6
LSI DATA TABLE (LSI端子機能表) 7
IC BLOCK DIAGRAM (ICブロック図) 7
DISASSEMBLY PROCEDURE (分解手順) 8
CIRCUIT BOARDS (シート基板図) 10
TEST PROGRAM (テストプログラム) 12
OVERALL CIRCUIT DIAGRAM (総回路図) 14
PARTS LIST

SK 001373

YAMAHA CORP.
HAMAMATSU, JAPAN
3.525-531 Printed in Japan '89.5

IMPORTANT NOTICE

This manual has been provided for the use of authorized Yamaha Retailers and their service personnel. It has been assumed that basic service procedures inherant to the industry, and more specifically Yamaha Products, are already known and understood by the users, and have therefore not been restated.

WARNING: Failure to follow appropriate service and safety procedures when servicing this product may result in personal injury, destruction of expensive components and failure of the product to perform as specified. For these reasons, we advise all Yamaha product owners that all service required should be performed by an authorized Yamaha Retailer or the appointed service representative.

IMPORTANT: The presentation or sale of this manual to any individual or firm does not constitute authorization, certification or recognition of any applicable technical capabilities, or establish a principle-agent relationship of any form.

The data provided is believed to be accurate and applicable to the unit(s) indicated on the cover. The research, engineering, and service departments of Yamaha are continually striving to improve Yamaha products. Modifications are, therefore, inevitable and specifications are subject to change without notice or obligation to retrofit. Should any discrepancy appear to exist, please contact the distributor's Service Division.

WARNING: Static discharges can destroy expensive components. Discharge any static electricity your body may have accumulated by grounding yourself to the ground buss in the unit (heavy gauge black wires connect to this buss).

IMPORTANT: Turn the unit OFF during disassembly and parts replacement. Recheck all work before you apply power to the unit.

SPECIFICATIONS

- **Keyboard**
  49 keys ($C_1 \sim C_5$)
- **Voice ("00 ~ 99")**
  100
- **STYLE ("00 ~ 19")**
  20
- **POWER/MODE**
  OFF, NORMAL, SINGLE FINGER, FINGERED, AUTO BASS
- **VOLUME**
  MASTER VOLUME, ACCOMP. VOLUME
- **RHYTHM CONTROL**
  INTRO/FILL IN 1, 2, SYNCRO START, START/STOP
- **VOICE/STYLE SELECT**
  −, +, 0, 1, 2, 3, 4, 5, 6, 7, 8, 9, VOICE, STYLE
- **DUAL VOICE**
  ON/OFF
- **TRANSPOSE**
  −, +
- **TEMPO**
  −, +
- **DEMONSTRATION**
  START/STOP
- **SONG MEMORY**
  RECORD/END, START BANK 1, 2
- **Auxiliary jacks**
  HEADPHONES/AUX. OUT, DC 9-12V IN
- **Tone Generators**
  FM Tone Generator (for voices), PCM Tone Generator (for the rhythm patterns).
- **Main Amplifiers**
  Stereo 2W × 2
- **Speakers**
  10 cm (4Ω) × 2 (3.9" × 2)
- **Rated Power Supply**
  DC9-12V (six size "C" batteries), AC power adaptor: PA-3, PA-4, PA-40
  Battery size: IEC "R-14"
  ANSI "C"
  JIS "SUM-2"
- **Battery Life**
  4 hours (when playing the Demo song)
- **Power Consumption**
  During AC power adaptor: 7W
  During battery use: 4W
- **External dimensions**
  637.5 (total length) × 252 (total width) × 84.7 (total height) mm
  (25-1/20" × 9-7/8" × 3-3/8")
- **Weight**
  2.3 kg (5.11 lbs.) excluding batteries
- **External casing**
  Styrene plastic

■総合仕様

●鍵盤
49鍵 (C_1～C_5)

●音色
100 (00～99)

●スタイル
20 (00～19)

●パワー／モード
OFF, ノーマル, シングルフィンガー, フィンガード, オートベース

●ボリューム
マスターボリューム, アカンパニメントボリューム

●リズムコントロール
イントロ/フィルイン1･2, シンクロスタート, スタート/ストップ

●ボイス／スタイルセレクト
－, ＋, 0, 1, 2, 3, 4, 5, 6, 7, 8, 9, ボイス, スタイル

●デュアルボイス
ON/OFF

●トランスポーズ
－, ＋

●テンポ
－, ＋

●デモンストレーション
スタート/ストップ

●ソングメモリー
レコード/エンド, スタート/バンク1･2

●外部機器接続端子
ヘッドホン/AUX. OUT, DC9-12V IN

●音源
FM音源(ボイス音源), PCM音源(リズム音源)

●メインアンプ
ステレオ　2W×2

●スピーカー
10cm(4Ω)×2

●定格電源
単2乾電池6本, ACアダプター(PA-3, PA-4, PA-40)

●電池寿命
4時間 (デモンストレーション演奏時, ボリューム：MAX)

●消費電力
7W (ACアダプター使用時)
4W (乾電池使用時)

●寸法 (W×D×H)
637.5×252.0×84.7mm

●重量
2.3kg

PSS-280

PSS280

■ PANEL LAYOUT（パネルレイアウト）

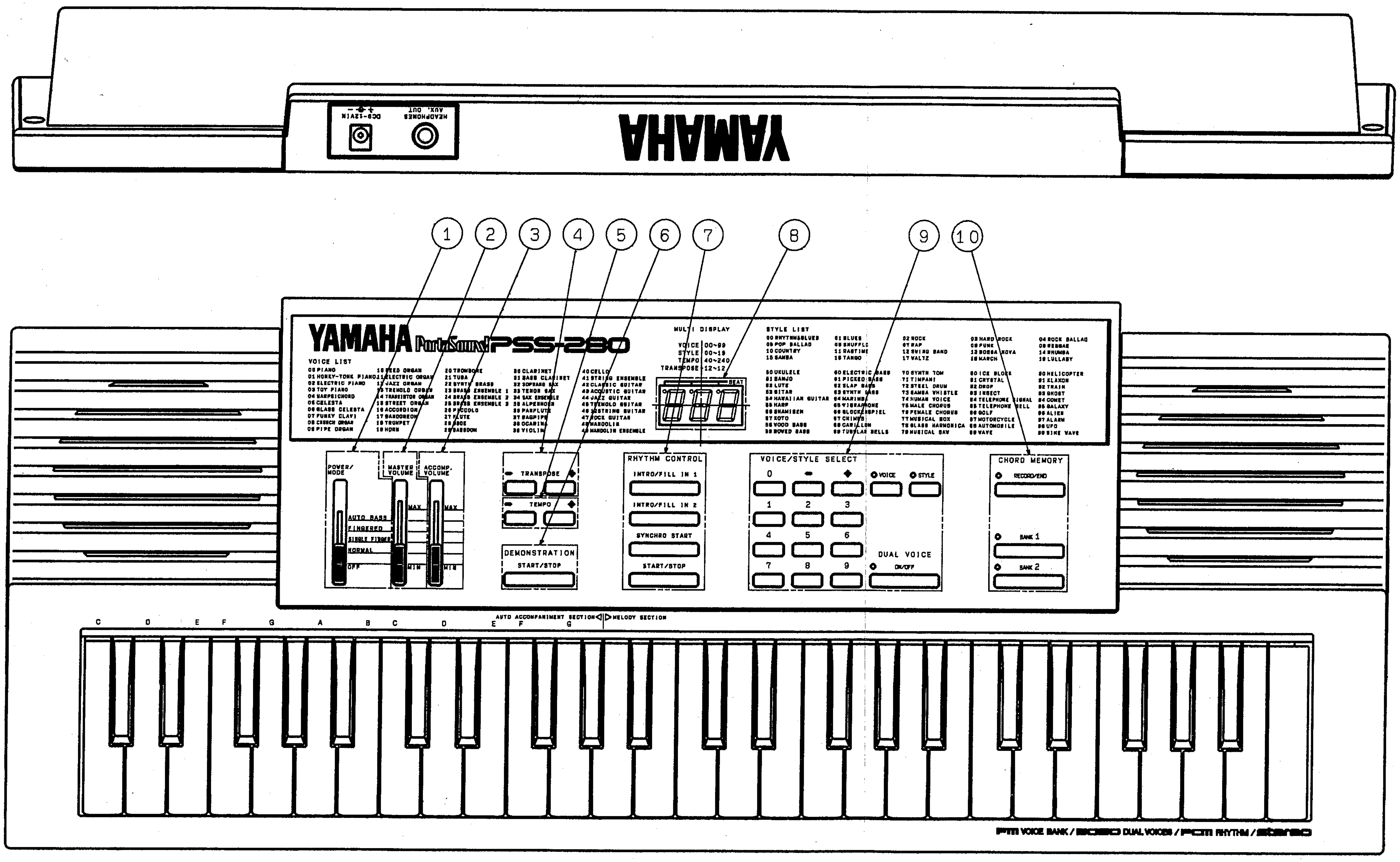

❶ POWER/MODE selector
❷ MASTER VOLUME control
❸ ACCOMP. VOLUME control
❹ TRANSPOSE keys
❺ TEMPO keys
❻ DEMONSTRATION START/STOP key
❼ RHYTHM CONTROL keys
❽ MULTI DISPLAY
❾ VOICE/STYLE SELECT keys & DUAL VOICE ON/OFF key
❿ CHORD MEMORY keys

❶ パワー/モード・スイッチ
❷ マスター・ボリューム
❸ アカンパニメント・ボリューム
❹ トランスポーズ・キー
❺ テンポ・キー
❻ デモンストレーション・スタート/ストップ・キー
❼ リズム・コントロール・キー
❽ マルチ・ディスプレイ
❾ ボイス/スタイル・セレクト & デュアル・ボイスON/OFFキー
❿ コード・メモリー・キー

■ CIRCUIT BOARD LAYOUT（ユニットレイアウト）

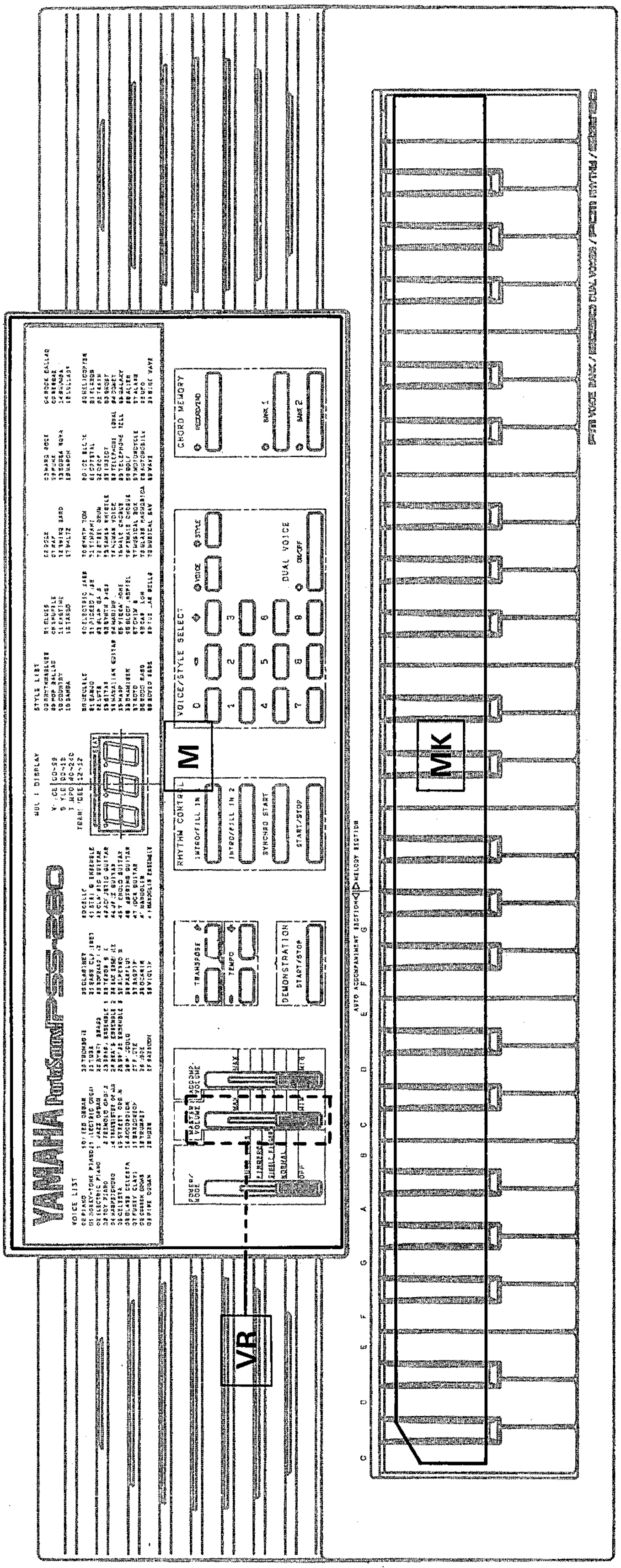

LSI DATA TABLE (LSI端子機能表)

• **HD63A01Y** *** (XG214B00) CPU

PIN NO.	NAME	I/O	FUNCTION	PIN NO.	NAME	I/O	FUNCTION
1	Vss		Ground	33	Vcc		DC Supply (+5V)
2	XTAL	I	Clock (8MHz)	34	P47	O	Port 4
3	EXTAL	I		35	P46	O	
4	MP0	I	Mode program	36	P45	O	
5	MP1	I		37	P44	O	
6	$\overline{RES}$	I	Reset	38	P43	O	
7	$\overline{STBY}$	I	Stand-by mode signal	39	P42	O	
8	$\overline{NMI}$	I	Non-maskable interrupt	40	P41	O	
9	P20	I/O	Port 2	41	P40	O	
10	P21	I/O		42	Vss		Ground
11	P22	I/O		43	P17	O	Port 1
12	P23	I/O		44	P16	O	
13	P24	I/O		45	P15	O	
14	P25	I/O		46	P14	O	
15	P26	I/O		47	P13	O	
16	P27	I/O		48	P12	O	
17	P50	I/O	Port 5	49	P11	O	
18	P51	I/O		50	P10	O	
19	P52	I/O		51	P37	I/O	Port 3
20	P53	I/O		52	P36	I/O	
21	P54	I/O		53	P35	I/O	
22	P55	I/O		54	P34	I/O	
23	P56	I/O		55	P33	I/O	
24	P57	I/O		56	P32	I/O	
25	P60	I/O	Port 6	57	P31	I/O	
26	P61	I/O		58	P30	I/O	
27	P62	I/O		59	P74	O	Port 7
28	P63	I/O		60	P73	O	
29	P64	I/O		61	P72	O	
30	P65	I/O		62	P71	O	
31	P66	I/O		63	P70	O	
32	P67	I/O		64	E	O	Enable

• **YM7116AA** (XG286A00) OPK

PIN NO.	NAME	I/O	FUNCTION	PIN NO.	NAME	I/O	FUNCTION
1	A0	I	Address select	10	TO	O	Test output
2	$\overline{CS}$	I	Chip select	11	D7	I	Data bus
3	XI	I	Clock	12	D6	I	
4	XO	O		13	D5	I	
5	$\overline{IC}$	I	Initial clear	14	D4	I	
6	Vss		Ground	15	D3	I	
7	O1	O	Analog output	16	D2	I	
8	O2	O		17	D1	I	
9	VDD		Power supply	21	D0	I	

IC BLOCK DIAGRAM (ICブロック図)

• **MC34072P** (IG430A00)
Dual Operational Amplifier

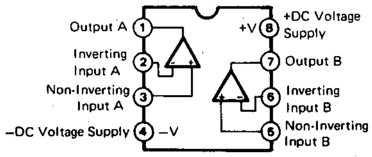

■ DISASSEMBLY PROCEDURE (分解手順)

1. Removal of Lower Case Assembly
After the 9 bind head tapping screws Ⓐ (3×10) and 4 bind head tapping screws Ⓑ (3×16) have been removed, the Lower case assembly can be removed. (Fig. 1)

1．下ケースAss'yの外し方
バインドタッピングネジⒶ(3×10)9本とバンドタッピングネジⒷ(3×16)4本を外し、下ケースAss'yを外します。(図1参照)

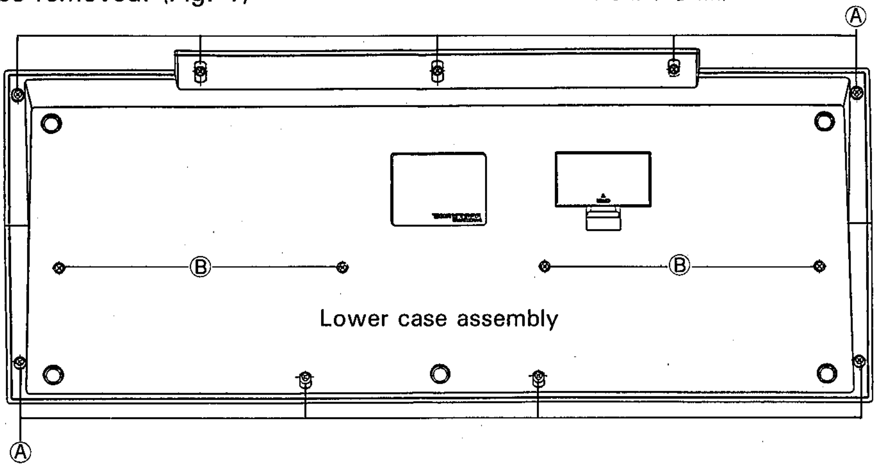

(Fig. 1)

2. Removal of Keyboard Assembly
2-1. Remove the Lower case assembly. (see procedure 1.)
2-2. After the 2 bind head tapping screws Ⓒ (3×10) and 2 bind head tapping screws Ⓓ (2.6×6) have been removed, the Keyboard assembly can be removed. (Fig. 2)

3. Removal of VR Circuit Board
3-1. Pull out the Slide knob (MASTER VOLUME) located on the front panel.
3-2. Remove the Lower case assembly. (see procedure 1.)
3-3. After the 2 bind head tapping screws Ⓔ (3×10) have been removed, the VR circuit board can be removed. (Fig. 2)

4. Removal of M Circuit Board
4-1. Remove the Lower case assembly. (see procedure 1.)
4-2. Remove the VR circuit board. (see procedure 3.)
4-3. After the 10 bind head tapping screws Ⓕ (3×10) have been removed, the M circuit board can be removed. (Fig. 2)

2．鍵盤Ass'yの外し方
2-1.下ケースAss'yを外します。(1項参照)
2-2.バインドタッピングネジⒸ(3×10)2本とバインドタッピングネジⒹ(2.6×6)2本を外し、鍵盤Ass'yを外します。(図2参照)

3．VRシートの外し方
3-1.フロントパネル上のスライドツマミ(MASTER VOLUME)を引き抜きます。
3-2.下ケースAss'yを外します。(1項参照)
3-3.バインドタッピングネジⒺ(3×10)2本を外し、VRシートを外します。(図2参照)

4．Mシートの外し方
4-1.下ケースAss'yを外します。(1項参照)
4-2.VRシートを外します。(3項参照)
4-3.バインドタッピングネジⒻ(3×10)10本を外し、Mシートを外します。(図2参照)

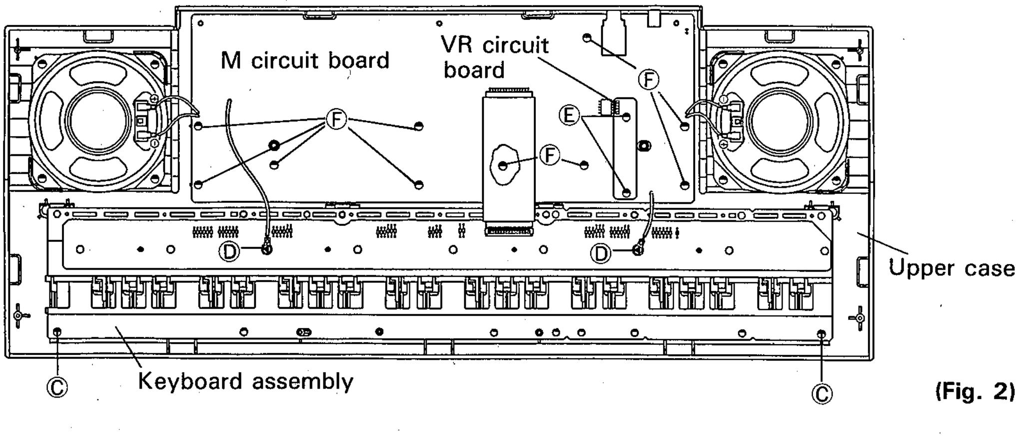

(Fig. 2)

PSS-280

5. Disassembly of Keyboard Assembly

5-1. Removal of MK Circuit Board

- Remove the Lower case assembly. (see procedure 1.)
- After the 9 bind head tapping screws Ⓖ (2.6 x 6) have been removed, the MK circuit board can be removed. (Fig. 3)

5-2. Removal of Rubber Contact

- Remove the Lower case assembly. (see procedure 1.)
- Remove the MK circuit board. (see procedure 5-1.)
- Remove the Rubber contacts (C12, C37) (Fig. 3)

5-3. Removal of White Key (C12) and Black Key (C12)

- Remove the Lower case assembly. (see procedure 1.)
- Remove the Keyboard assembly. (see procedure 2.)
- After the 2 bind head tapping screws Ⓗ (2.6 x 10) have been removed, the White key (C12) and Black key (C12) can be removed. (Fig. 3)

5-4. Removal of White Key (C37) and Black Key (C37)

- Remove the Lower case assembly. (see procedure 1.)
- Remove the Keyboard assembly. (see procedure 2.)
- Remove the White key (C12) and Black key (C12). (see procedure 5-3.)
- After the 5 bind head tapping screws Ⓘ (2.6 x 10) have been removed, the White key (C37) and Black key (C37) can be removed. (Fig. 3)

5．鍵盤Ass'yの分解

5-1.MKシートの外し方

・下ケースAss'yを外します。(1項参照)

・バインドタッピングネジⒼ(2.6×6)9本を外し、MKシートを外します。(図3参照)

5-2.接点ゴム(C12,C37)の外し方

・下ケースAss'yを外します。(1項参照)

・接点ゴム(C12,C37)を引き抜きます。(図3参照)

5-3.白鍵(C12)、黒鍵(C12)の外し方

・下ケースAss'yを外します。(1項参照)

・鍵盤Ass'yを外します。(2項参照)

・バインドタッピングネジⒽ(2.6×10)2本を外し、白鍵(C12)、黒鍵(C12)を外します。(図3参照)

5-4.白鍵(C37)、黒鍵(C37)の外し方

・下ケースAss'yを外します。(1項参照)

・鍵盤Ass'yを外します。(2項参勲)

・白鍵(C12)と黒鍵(C12)を外します。(5-3.項参照)

・バインドタッピングネジⒾ(2.6×10)5本を外し、白鍵(C37)と黒鍵(C37)を外します。(図3参照)

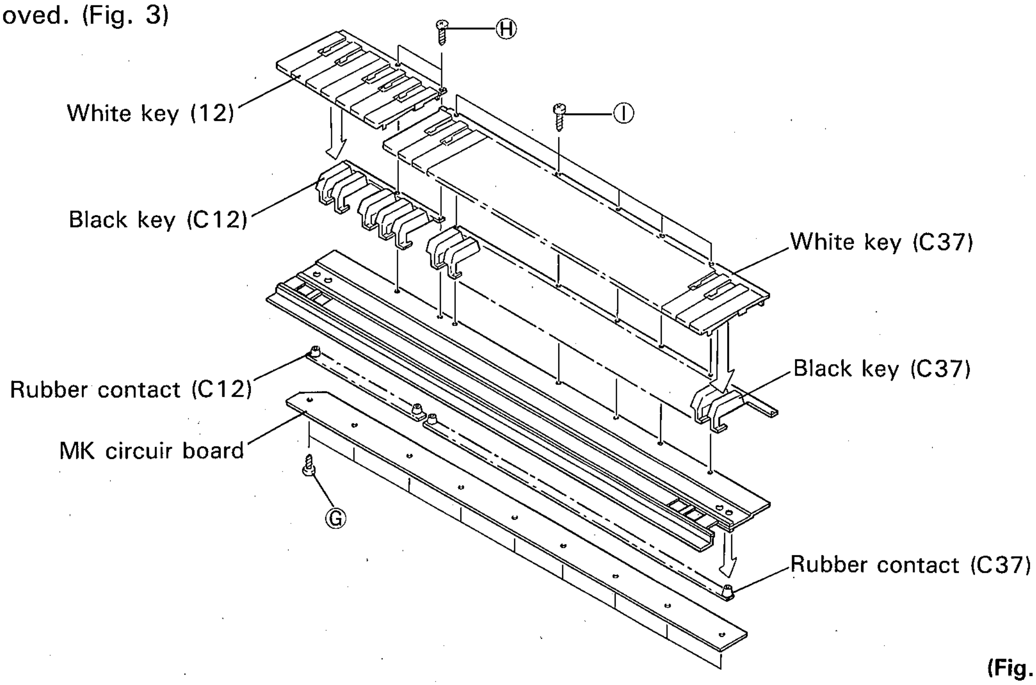

(Fig. 3)

■CIRCUIT BOARDS (シート基板図)

● M Circuit Board

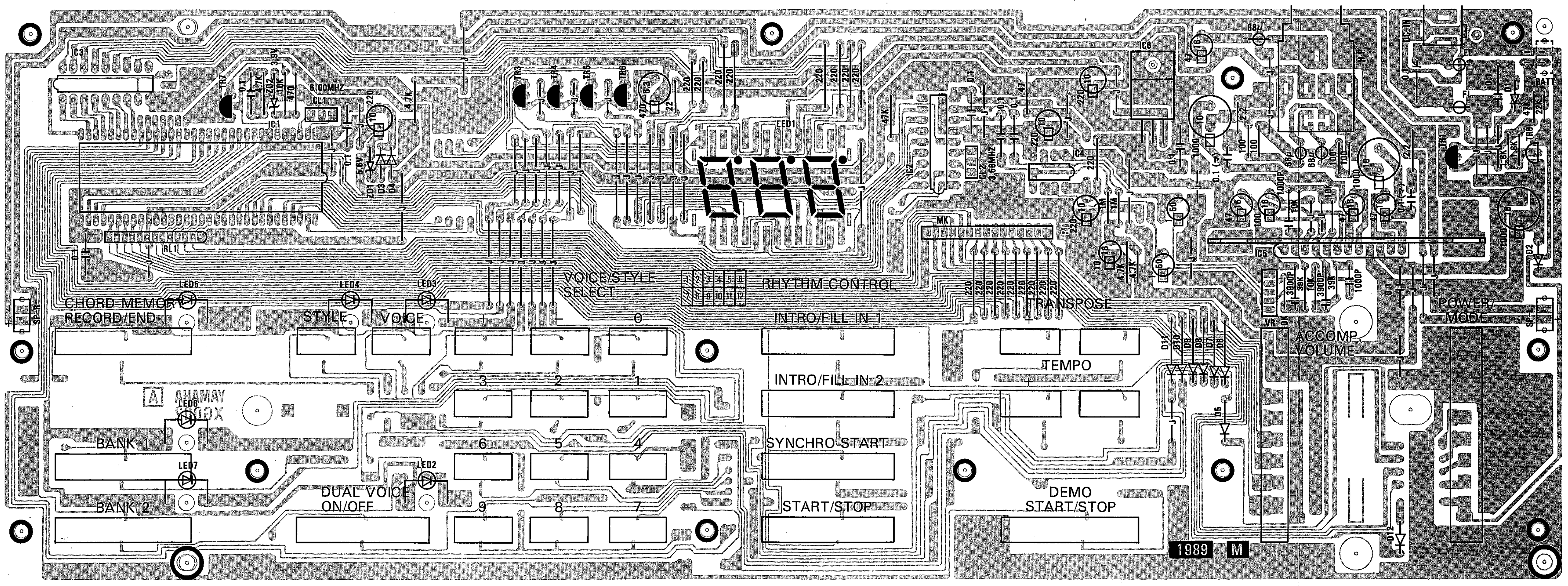

● VR Circuit Board

MASTER VOLUME

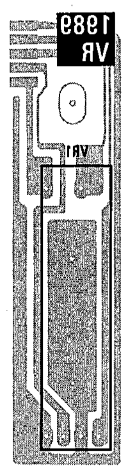

Pattern side (パターン側)

Components side (部品側)

Notes)

* Circuit Board	VR (VH114000) XG002B0
1. Slide Pot.	
VR1:	A10KX2 RS25112 (VH215000) MASTER VOLUME

Notes)

* Circuit Board	M (VH114000) XG002B0
1. IC	
IC1:	HD63A01Y***(XG214B00) CPU
IC2:	YM7116AA (XG286A00) OPK
IC4:	MC34072P (XG430A00) OP AMP.
IC5:	AN7148 2.1W (XE417A00) P AMP.
IC6:	LM7805CT (XG198A00) +5V 1V REG
2. Transistor	
TR1:	2SB1416 (VH481100)
TR7, 8:	2SC2603 E, F (IC260320)
3. Transistor Array	
IC3:	AN90B22 (VH480900) LED DRIVER
4. Digital Transistor	
TR1～5:	DTA123ESTP (VF325300)
TR6:	DTC114ES (VD678700)
5. Diode	
D1, 2:	1SR139-100A (VH530100)
D3～12:	1SS133 (IF003450)
6. Zener Diode	
ZD1:	MTZ5.6A 5.6V (IF010710)
7. LED	
LED1:	SL-1351-60 (VH373800)
LED2～7:	LT1P21A RED (VF325600)
8. Resistor Array	
RL1:	RGLE12X473J (VH373200)
9. Electrolytic Cap.	
1000 6.3:	1000μF 6.3V (FJ219100)
1000 10:	1000μF 10.0V (FZ003440)
1000 16:	1000μF 16.0V (FJ239100)
10. Coil	
FL:	FL5R200QNT 20μ (VB835000)
11. Ceramic Resonator	
CL1:	CST6.00MGW (VH611900)
CL2:	CST3.58MGW (VH612200)
12. Phone Jack	
HP:	YKB21-5006 (LB101870) HEADPHONES
13. Connector	
DC-IN:	HEC2305 (VC664500) DC9-12V IN

■TEST PROGRAM (テストプログラム)

1. Test Entry
While pressing the C7 and B6 keys, turn on the POWER switch.

2. After the system has entered the test program mode, the LED display will indicate the ROM version number, and then the program will proceed to the next routine automatically.

3. Switch Check

3-1. When a Panel switch is pressed, a PIANO voice will be produced as shown in the table below. If a keyboard switch is pressed, a ELECTRIC ORGAN voice will sound.

3-2. While the Switch test is executing, the dots on the LED display will light "ON and OFF" repeatedly.

3-3. If more than two switches are pressed simultaneously, "---" will shows.

3-4. When a panel switch is pressed, the LED indicator that is adjacent to the switch will light ON.

3-5. If the numeric key is pressed, the corresponding figure will be displayed.

3-6. Upon completion of these tests, the "ooo" will be indicated on the LED display.

4. When the POWER switch is turned OFF and ON, the system will return to normal operation.

1．テストプログラムの起動
C７とB６の鍵盤を押しながら電源をONするとテストプログラムに入ります。

２．テストプログラムに入ると、ROMのバージョンナンバーがLEDディスプレイに表示され、次のスイッチチェックに進みます。

３．スイッチチェック

3-1.パネルスイッチを押すと、ピアノ音が、下表の音程で発音します。
また、鍵盤を押すと、エレクトリックオルガンの音色で発音します。

3-2.テスト実行中は、LEDディスプレイのドットが、１個ずつ点灯を繰り返します。

3-3.２つ以上のスイッチを同時に押すと、"－－－"が表示されます。

3-4.スイッチがONの時、当該のLEDインジケーターが点灯します。

3-5.10キーがONされると、10キーの番号が表示されます。

3-6.全てのスイッチのテストを終了すると、LEDディスプレイに"ｏｏｏ"が表示されます。

４．POWERスイッチを、OFF→ONすると通常モードに戻ります。

- **Switch Check**

SWITCH	NOTE	SWITCH	NOTE
NORMAL	C1	VOICE/STYLE 0	G2
SINGLE FINGER	C#1	VOICE/STYLE 1	G#2
FINGERED	D1	VOICE/STYLE 2	A2
AUTO BASS	D#1	VOICE/STYLE 3	A#2
ACCOMP VOLUME 0	BASS DRUM	VOICE/STYLE 4	B2
ACCOMP VOLUME 1	SNARE DRUM	VOICE/STYLE 5	C3
ACCOMP VOLUME 2	HI-HAT CLOSE	VOICE/STYLE 6	C#3
ACCOMP VOLUME 3	HI-HAT OPEN	VOICE/STYLE 7	D3
ACCOMP VOLUME 4	TOM TOM	VOICE/STYLE 8	D#3
ACCOMP VOLUME 5	CRASH CYMBAL	VOICE/STYLE 9	E3
TRANSPOSE –	A#1	VOICE/STYLE –	F3
TRANSPOSE +	B1	VOICE/STYLE +	F#3
TEMPO –	C2	VOICE	G3
TEMPO +	C#2	STYLE	G#3
DEMO START/STOP	D2	DUAL VOICE	A3
INTRO/FILL IN 1	D#2	RECORD	A#3
INTRO/FILL IN 2	E2	BANK 1	B3
SYNCHRO START	F2	BANK 2	C4
START/STOP	F#2		

■ OVERALL CIRCUIT DIAGRAM (総回路図)

PSS280

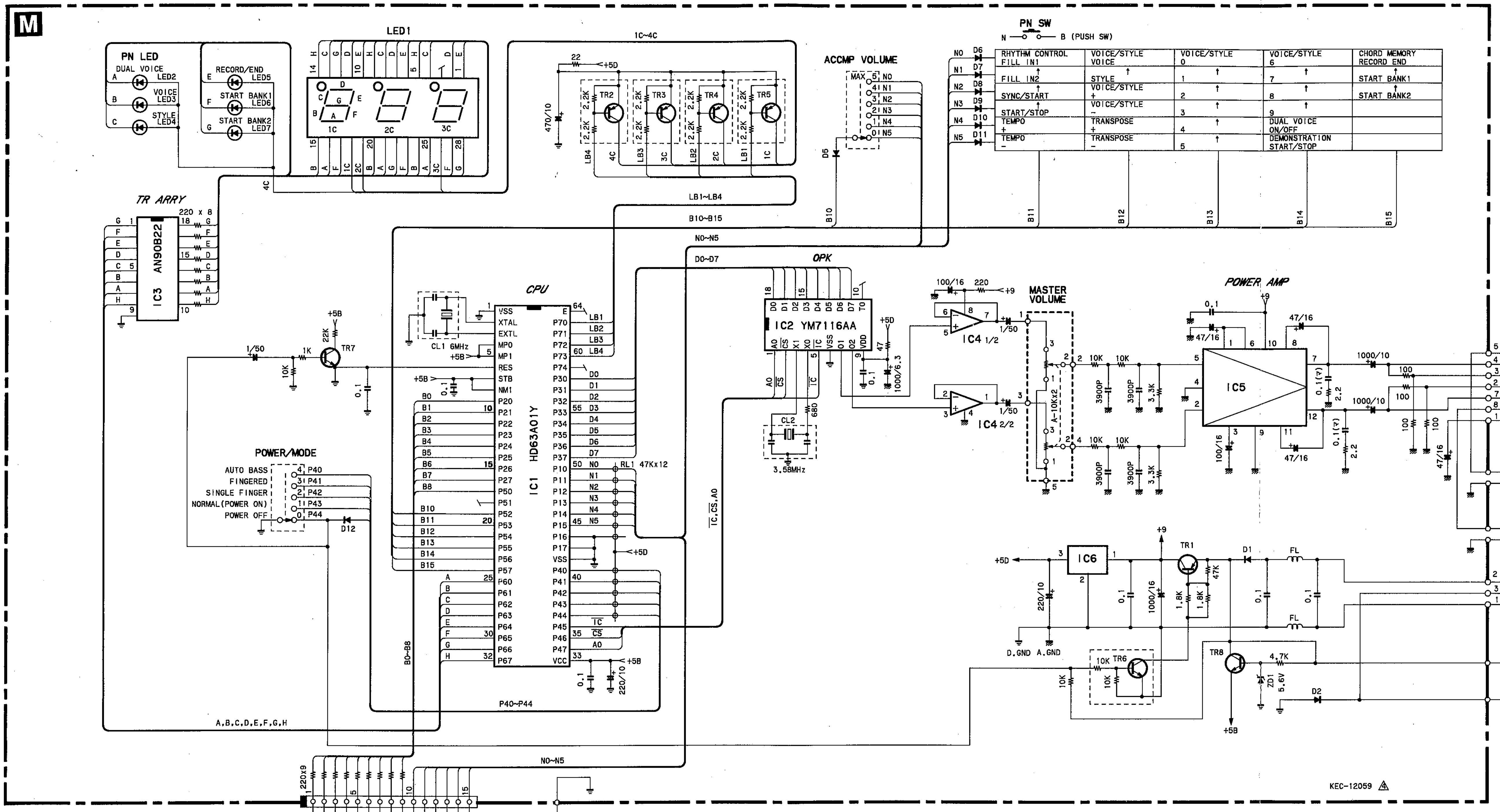

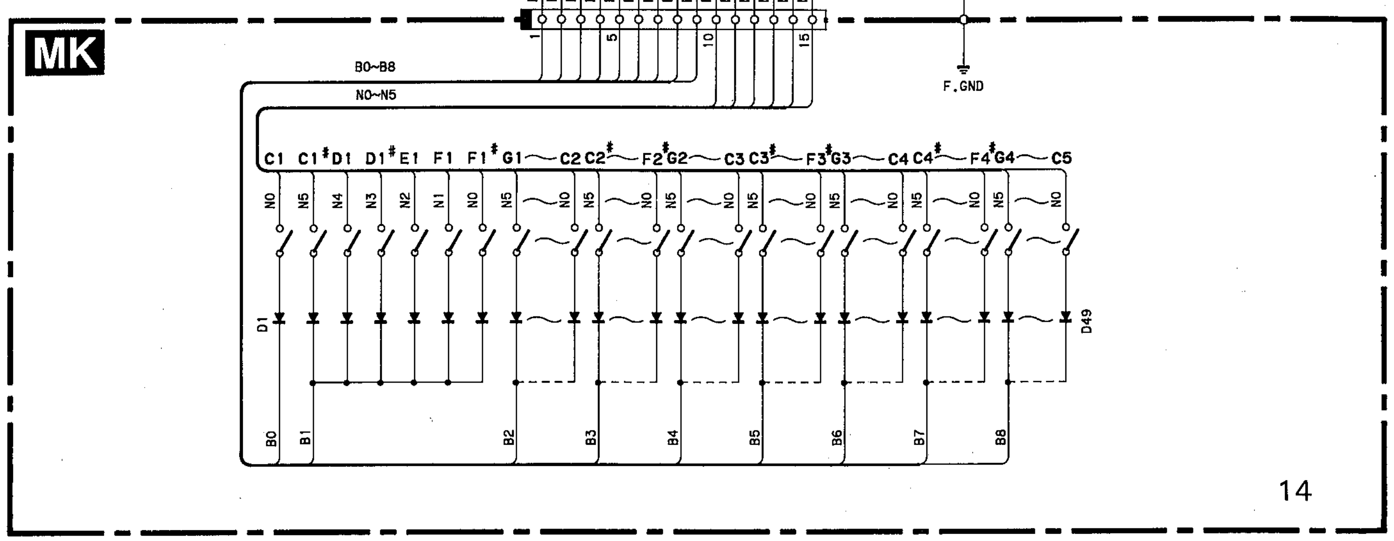

Notes)
* Circuit Board — M (VH114000) XG002B0

1. IC
   - IC1: HD63A01Y***(XG214B00) CPU
   - IC2: YM7116AA (XG286A00) OPK
   - IC4: MC34072P (XG430A00) OP AMP.
   - IC5: AN7148 2.1W (XE417A00) P AMP.
   - IC6: LM7805CT (XG198A00) +5V 1V REG
2. Transistor
   - TR1: 2SB1416 (VH481100)
   - TR7, 8: 2SC2603 E, F (IC260320)
3. Transistor Array
   - IC3: AN90B22 (VH480900) LED DRIVER
4. Digital Transistor
   - TR1 ~ 5: DTA123ESTP (VF325300)
   - TR6: DTC114ES (VD678700)
5. Diode
   - D1, 2: 1SR139-100A (VH530100)
   - D3 ~ 12: 1SS133 (IF003450)
6. Zener Diode
   - ZD1: MTZ5.6A 5.6V (IF010710)
7. LED
   - LED1: SL-1351-60 (VH373800)
   - LED2 ~ 7: LT1P21A RED (VF325600)
8. Resistor Array
   - RL1: RGLE12X473J (VH373200)
9. Electrolytic Cap.
   - 1000 6.3: 1000μF 6.3V (FJ219100)
   - 1000 10: 1000μF 10.0V (FZ003440)
   - 1000 16: 1000μF 16.0V (FJ239100)
10. Coil
    - FL: FL5R200QNT 20μ (VB835000)
11. Ceramic Resonator
    - CL1: CST6.00MGW (VH611900)
    - CL2: CST3.58MGW (VH612200)
12. Phone Jack
    - HP: YKB21-5006 (LB101870) HEADPHONES
13. Connector
    - DC-IN: HEC2305 (VC664500) DC9-12V IN

Notes)
* Circuit Board — VR (VH114000) XG002B0

1. Slide Pot.
   - VR1: A10KX2 RS25112 (VH215000) MASTER VOLUME